HMC - CONVEYOR MODEL 2300

SPECIFICATIONS

Drive:	Patented Pneumatic Air Bellow
Operating Pressure:	0 to 80 PSI
Air Requirements:	Dry Filtered Air
Approx. Air Consumption:	9.3 CFM @ 80 PSI
Operating Temperature:	0 to 120° F.
Frame Width:	19"
Min. Tray Width:	12"
Max. Tray Weight:	575 lbs.
Max. Product Load:	1150 lbs.
Product Speed @ 80 PSI:	20 FPM (Actual speed depends on the product's physical characteristics)
Tray:	Formed 10 Ga
Frame:	¼" Formed Steel
Leg Supports:	¼" Formed Steel
Optional Features:	Tray Material – Stainless Steel, Rigidized, Abrasion Resistant, 7Ga Top Covers Drop Chutes, Side Discharge Gates Stainless Steel Frame Reversible Drive

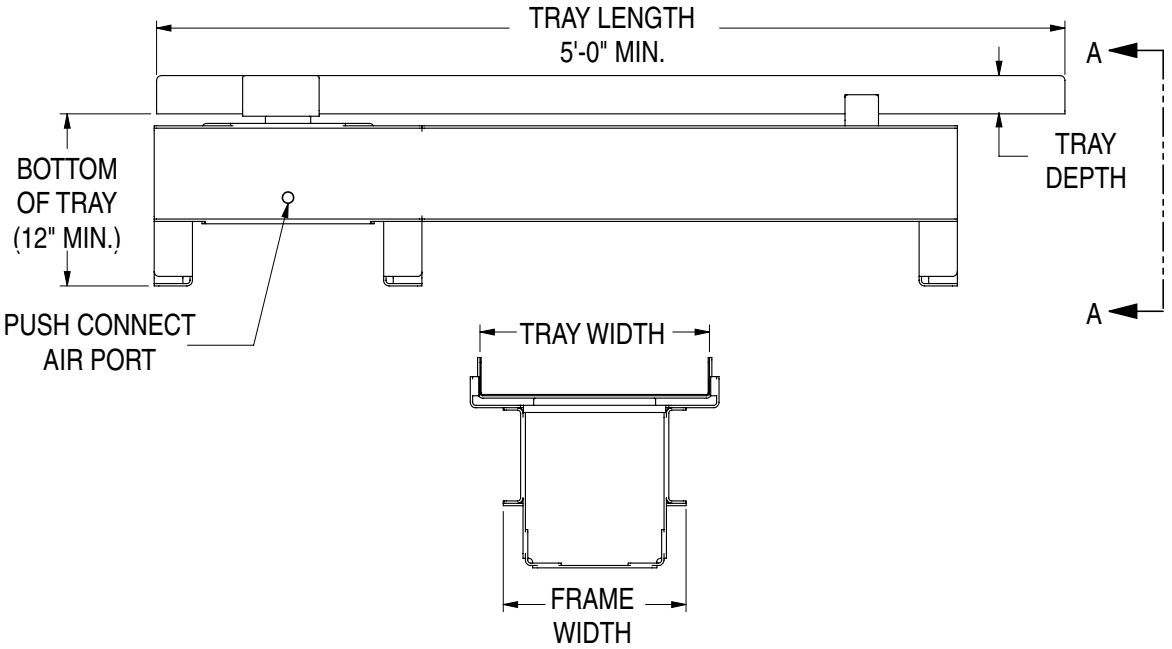

END VIEW A-A

ENDURA-VEYOR INC.
P.O. Box 205 • Alpena, MI 49707 • fax (989) 358-7065 • voice (800) 356-1593
Visit us on the world wide web: www.endura-veyor.com

* Quantity available for shipment is contingent upon quantity in stock at time of sale.